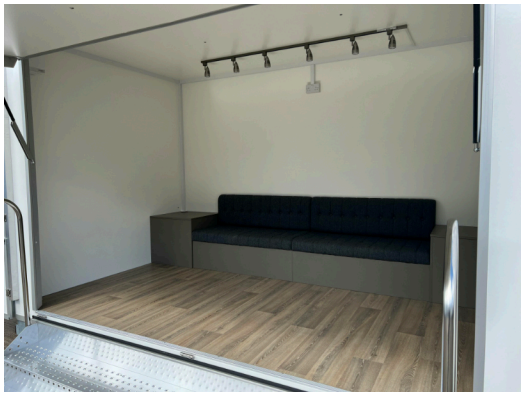

TOW MASTER

3.6mt Colorado Display Trailer

HT002

Features

- 3600mm x 2150mm X 2200mm body
- Twin braked axles 2000kg maximum GLW
- Lift up canopy with logo board
- 3mt of fold out aluminium steps c/w Slot in stainless steel handrails
- Pair of display wings
- Non-slip vinyl floor covering
- 240v - 16amp - 5 double sockets, 1 low Profile LED strip light and 6 x track Mounted LED spotlights
- 2 x 1200mm fully upholstered bench seat
- 2 x corner coffee table

Optional Extras

- 2.4mt x 760mm folding access ramp
- 3mt flag pole
- 6mt flag pole c/w rotating arm
- Bistro table & 4 chairs
- Branded Display wing panel
- Branded logo board panel
- Additional branding - panels, flags, etc.

A welcoming professional looking trailer – This medium exhibition trailer represents superb value for money. The simplicity of the set up and the lack of any heavy lifting make the Colorado a very popular choice.

Flexible and with additional options to create the space you are looking for.

The Colorado exhibition trailer provides good shelter from rain, shade from the sun and performs well in windy conditions.

TOW MASTER

3.6mt Colorado Display Trailer

HT002

3.6mt Colorado Display Trailer

HT002

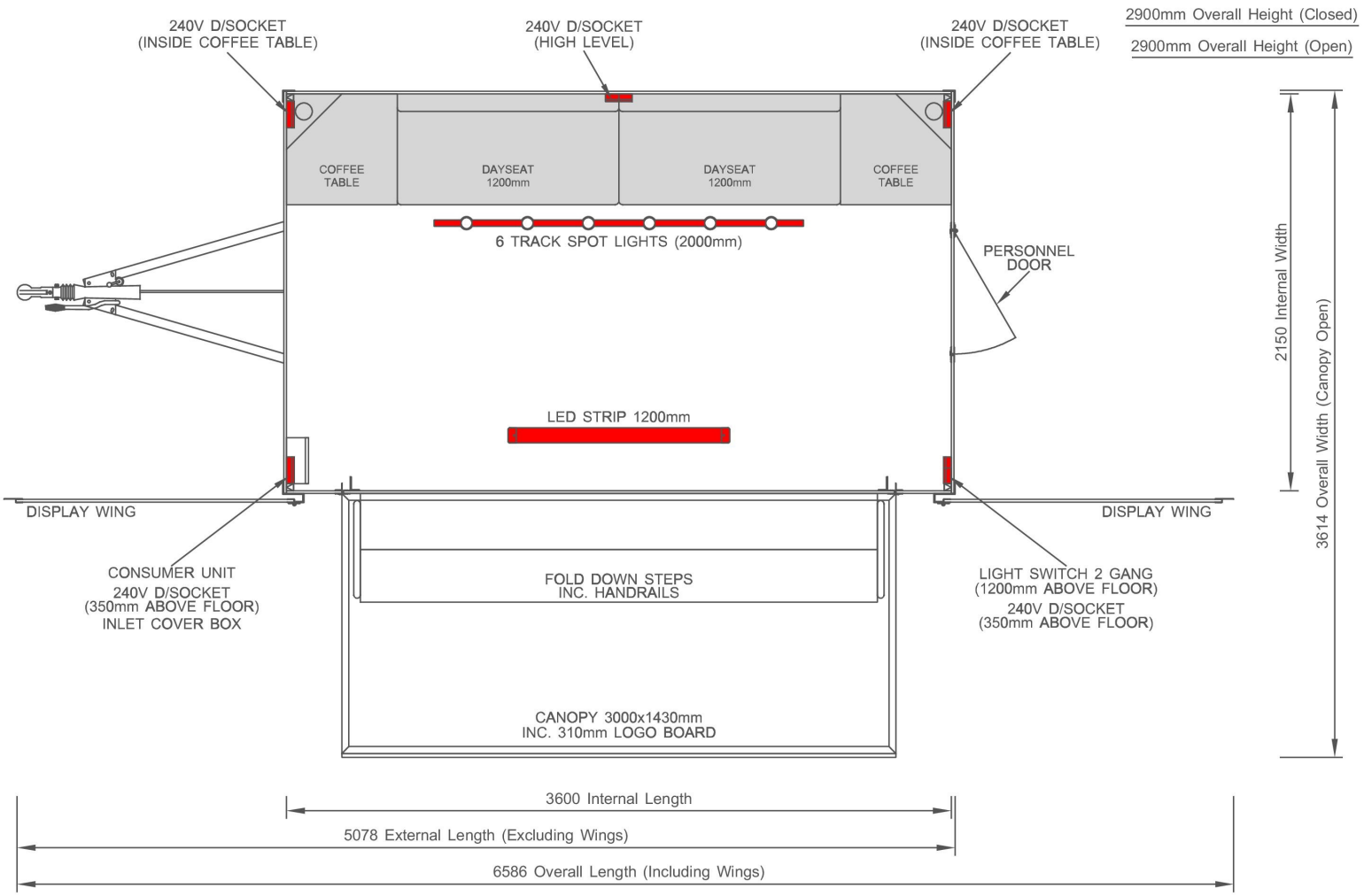

Plan view with lights and electrical sockets highlighted

3.6mt Colorado Display Trailer

HT002

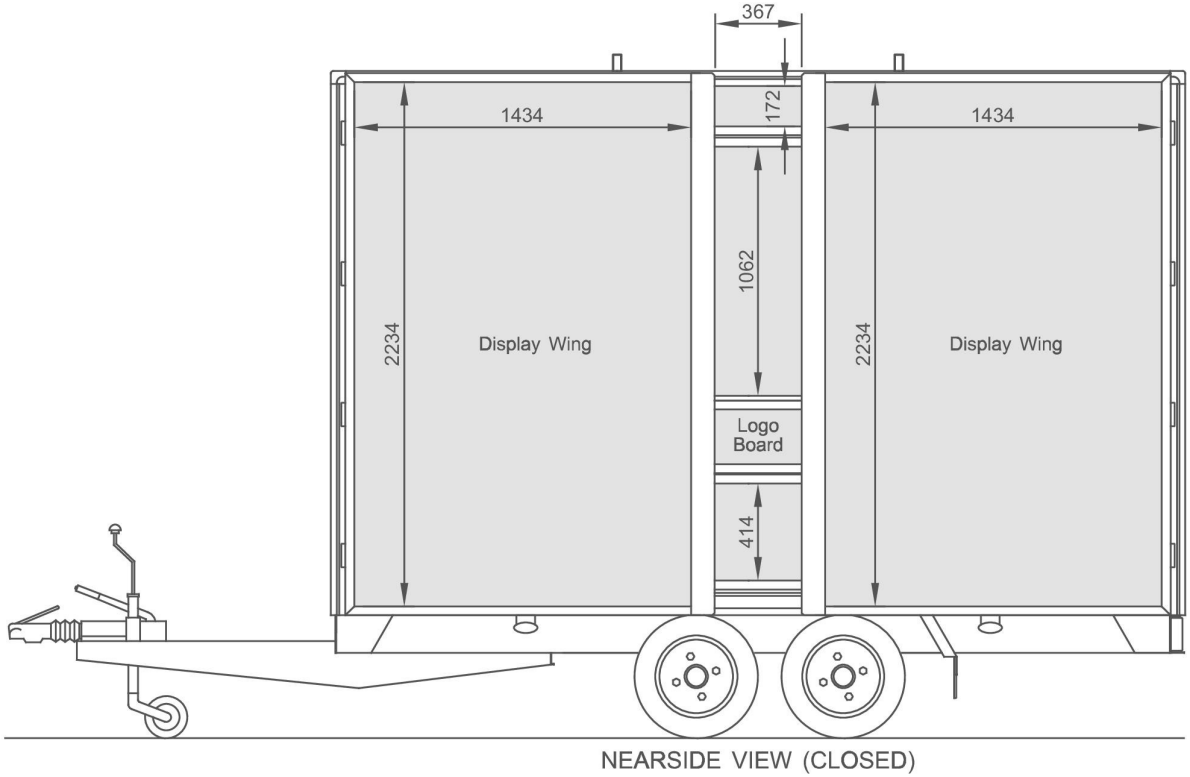

Panel dimensions near side closed

3.6mt Colorado Display Trailer

HT002

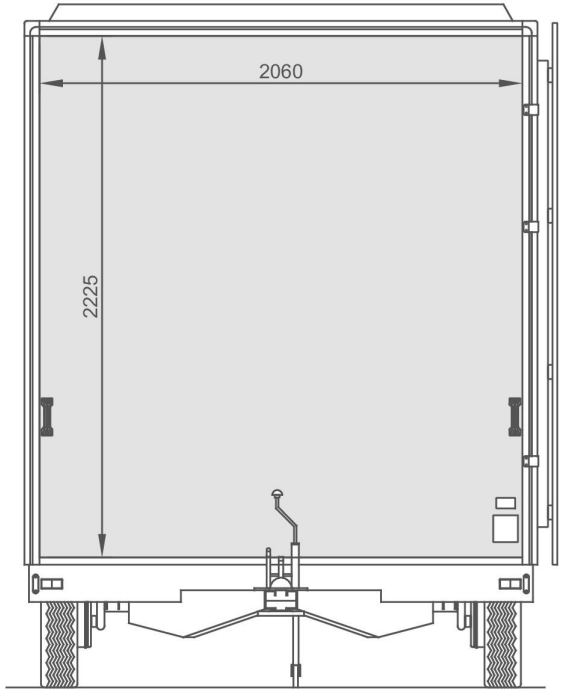

FRONT VIEW

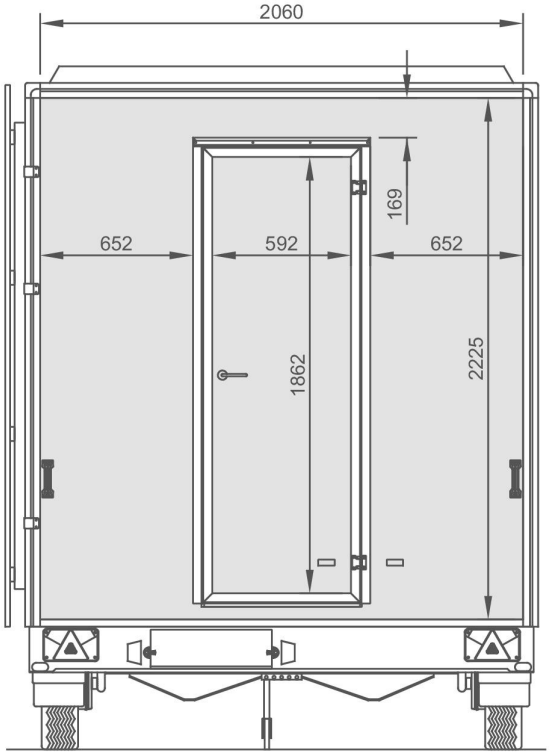

REAR VIEW

Panel dimensions front and rear

3.6mt Colorado Display Trailer

HT002

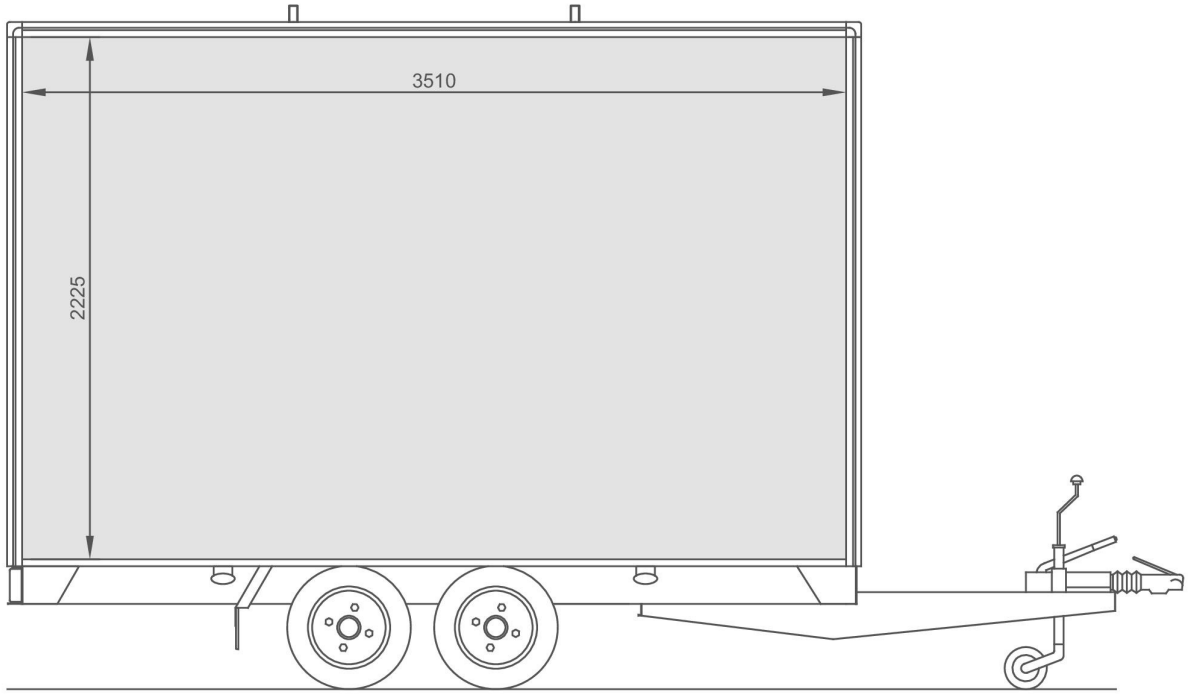

OFFSIDE VIEW (CLOSED)

Panel dimensions off side closed

3.6mt Colorado Display Trailer

HT002

3mm ACP (Aluminium Composite Panel) Is Recommended For Slide In Graphic Panels

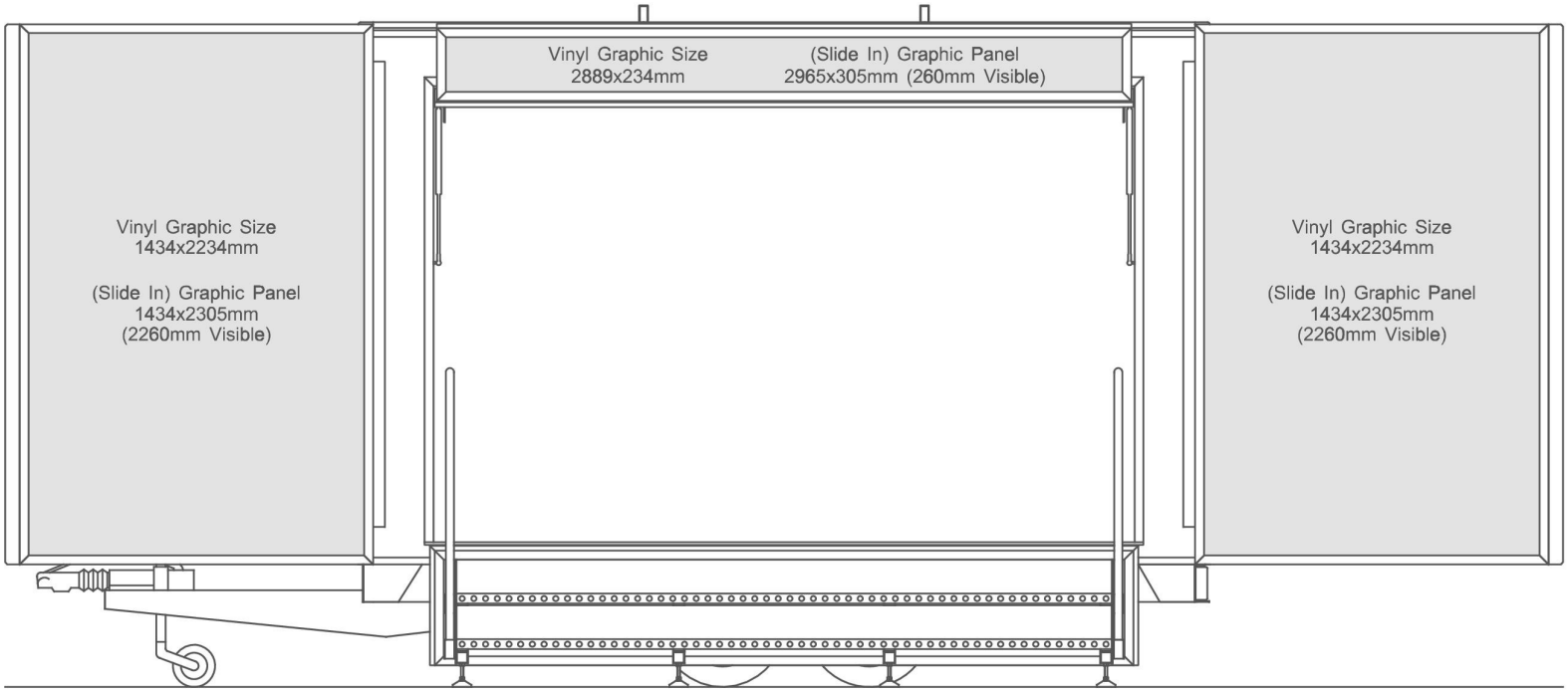

NEARSIDE VIEW (OPEN)

Panel dimensions logo board and display wings